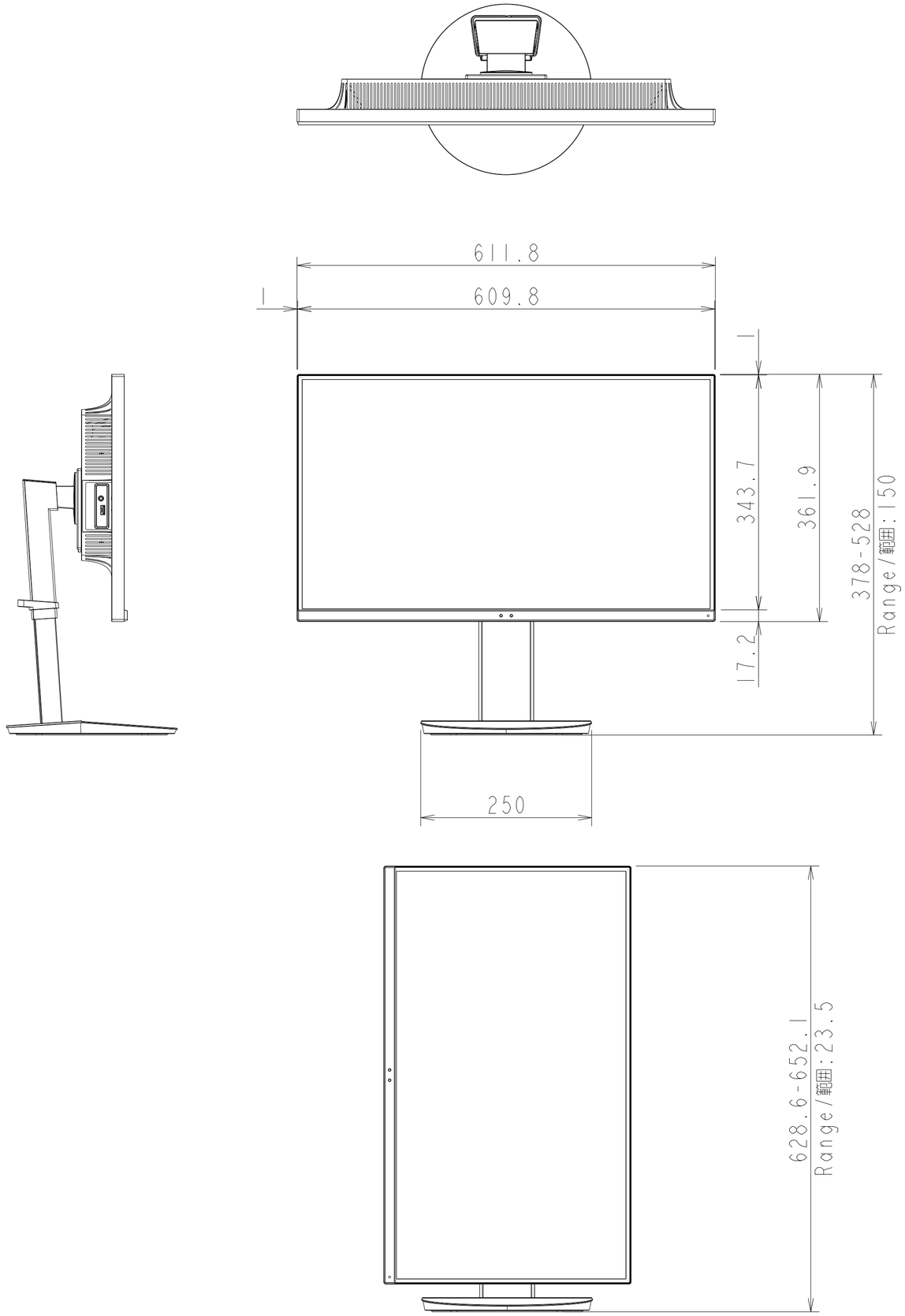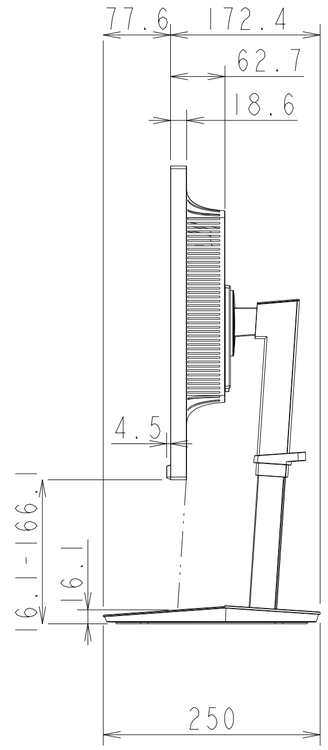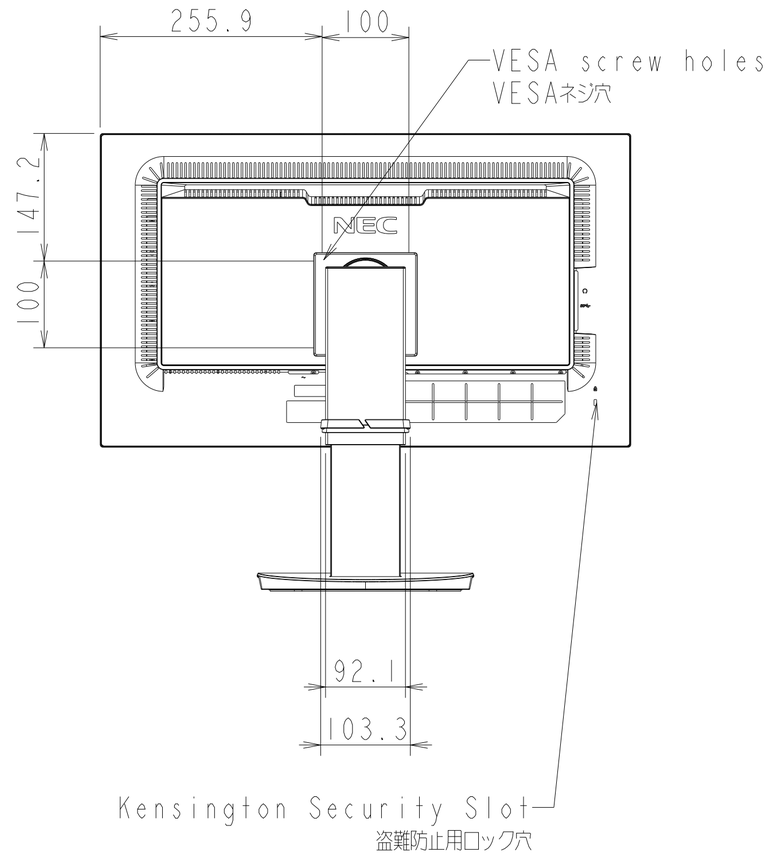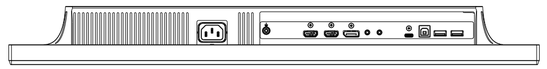LCD-EA271U-B2
Sharp NEC Display Solutions, Ltd.
25/May/2021 (2021/5/25)
UNIT(単位):mm