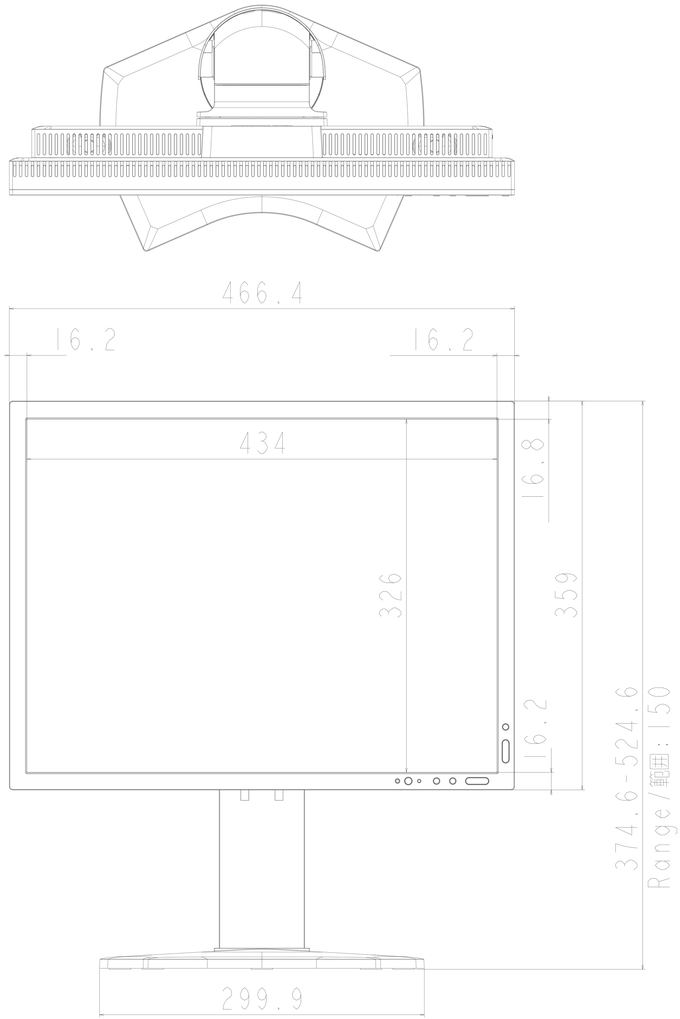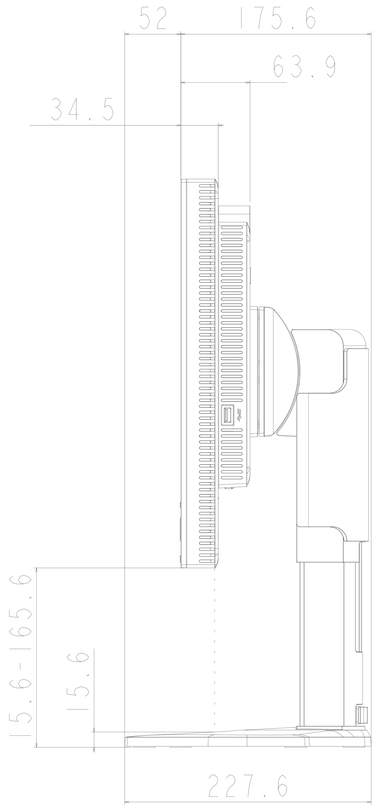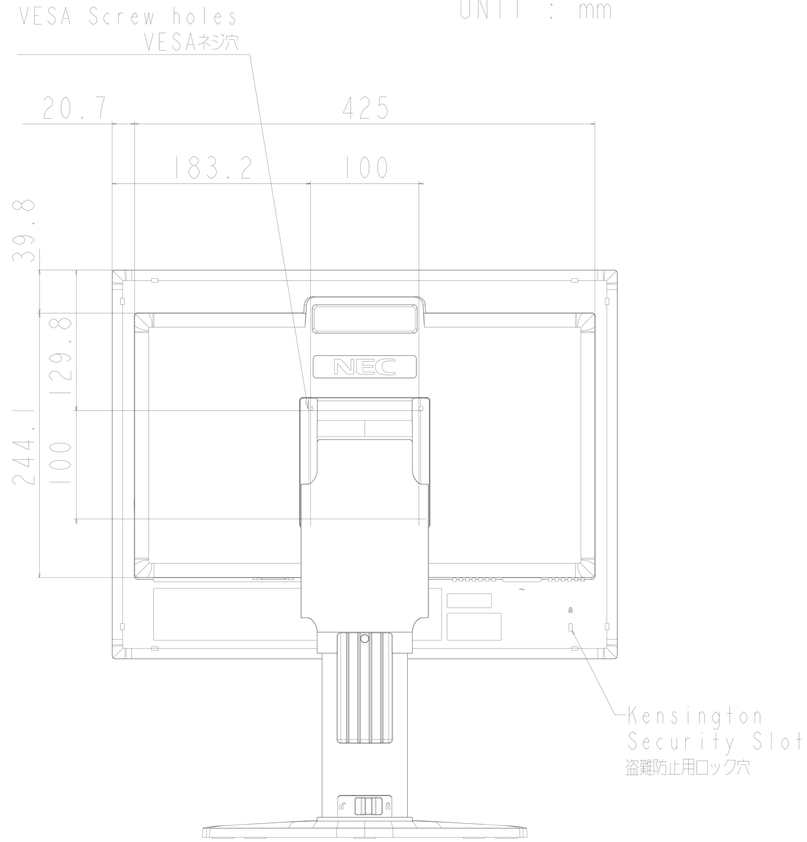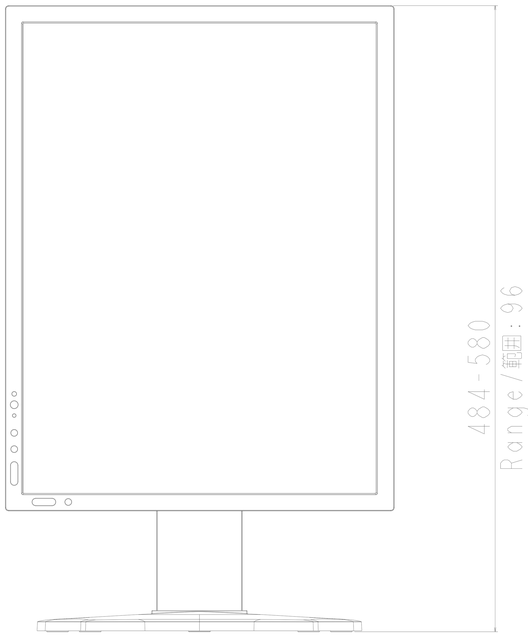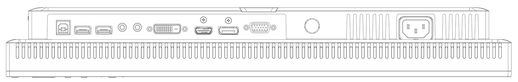MultiSync LCD-P212-BM
NEC Display Solutions, Ltd.
20/Nov/2019(2019/11/20)
UNIT : mm