E231W OUTLINE DRAWING
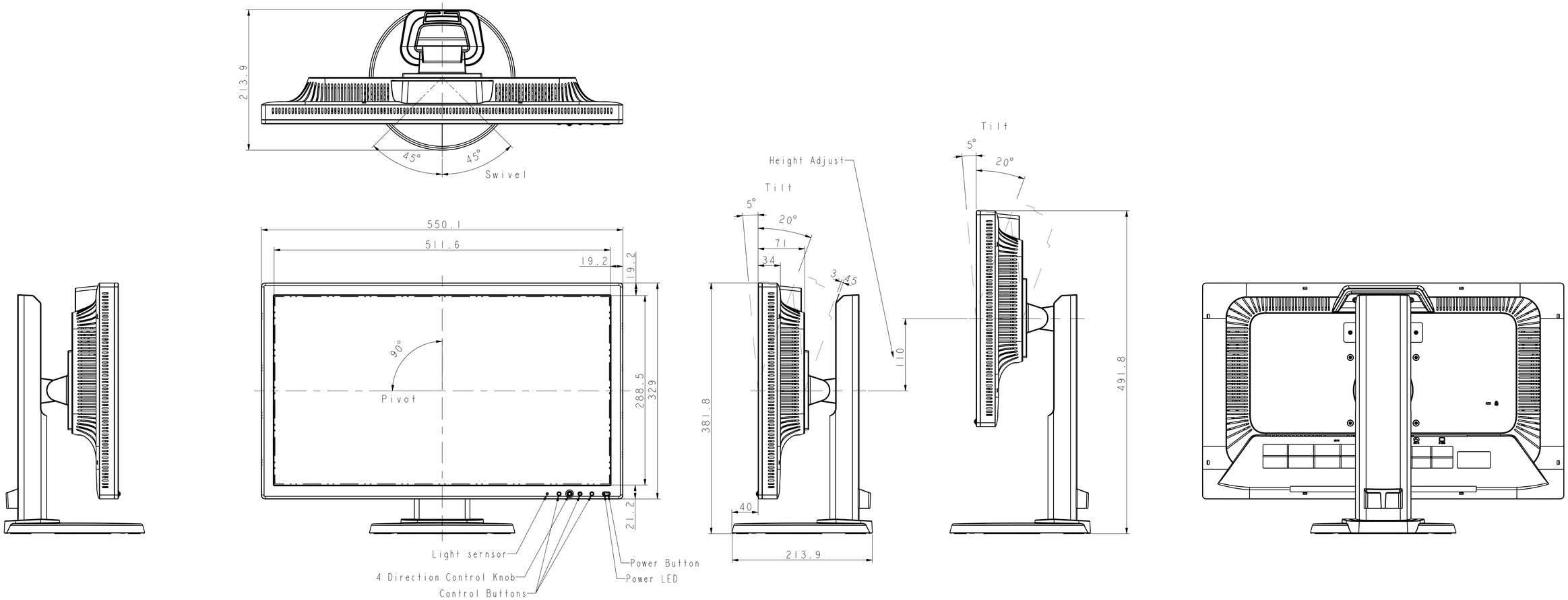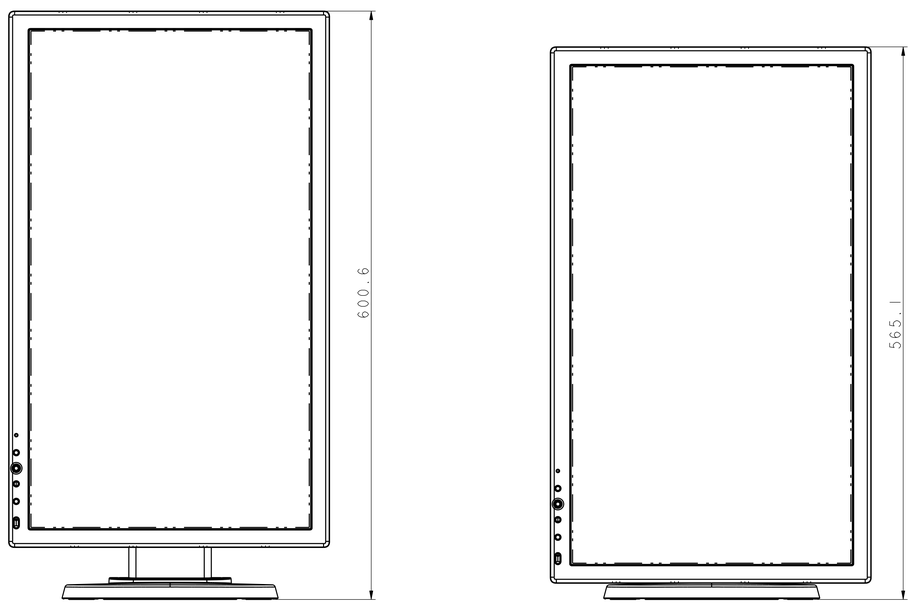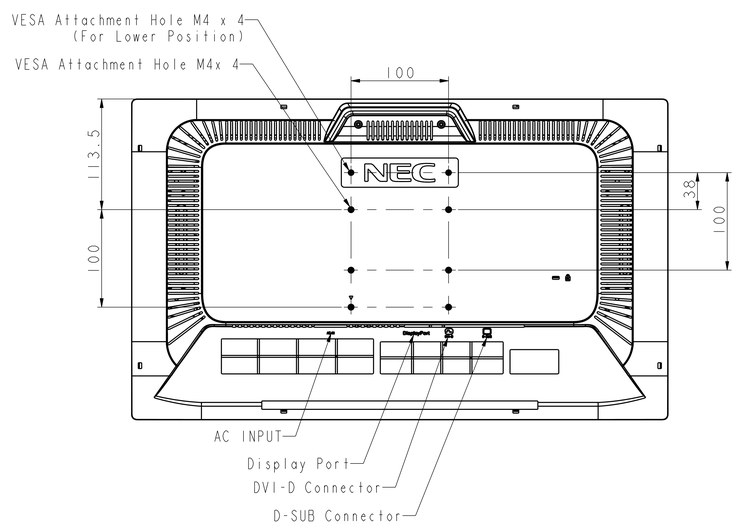
2010/03/25