UN462A with WM-46UN-P2 Installation Drawing.

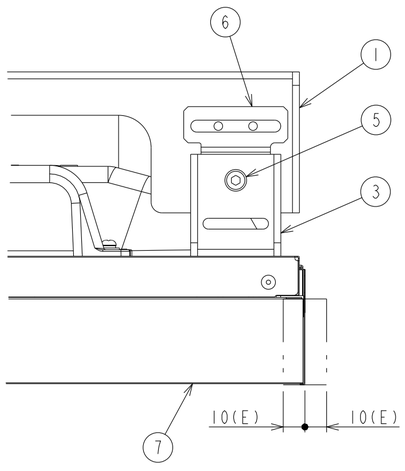

DETAIL of A

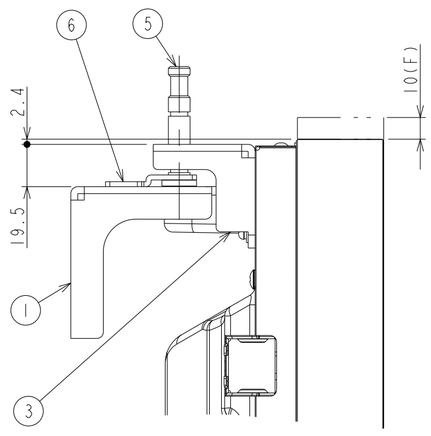

DETAIL of B

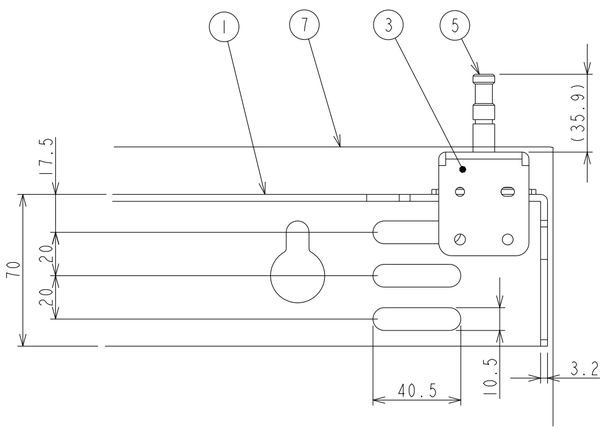

DETAIL of C

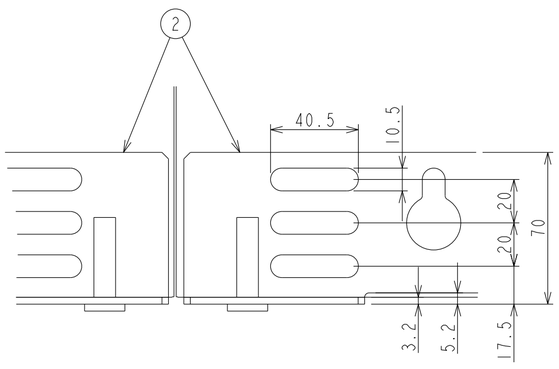

DETAIL of D

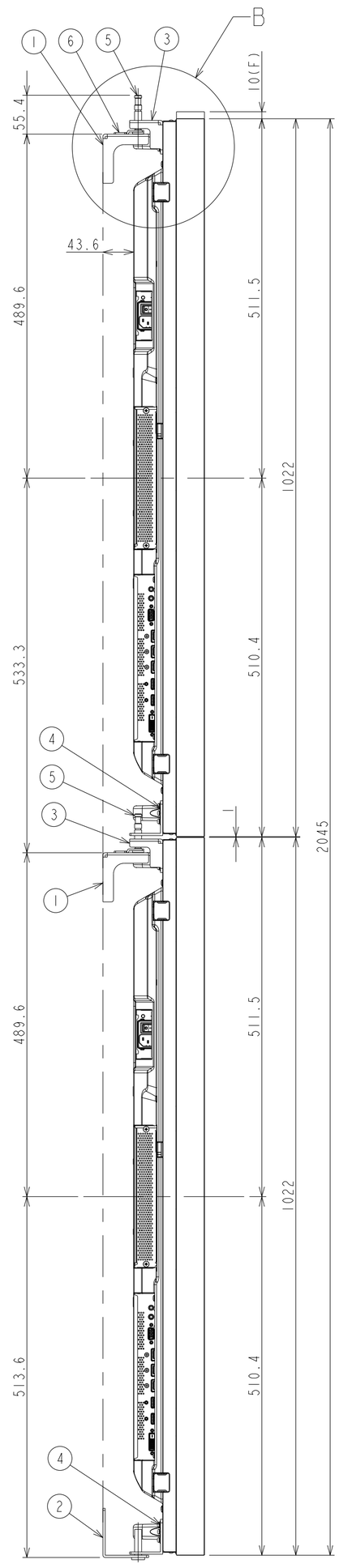

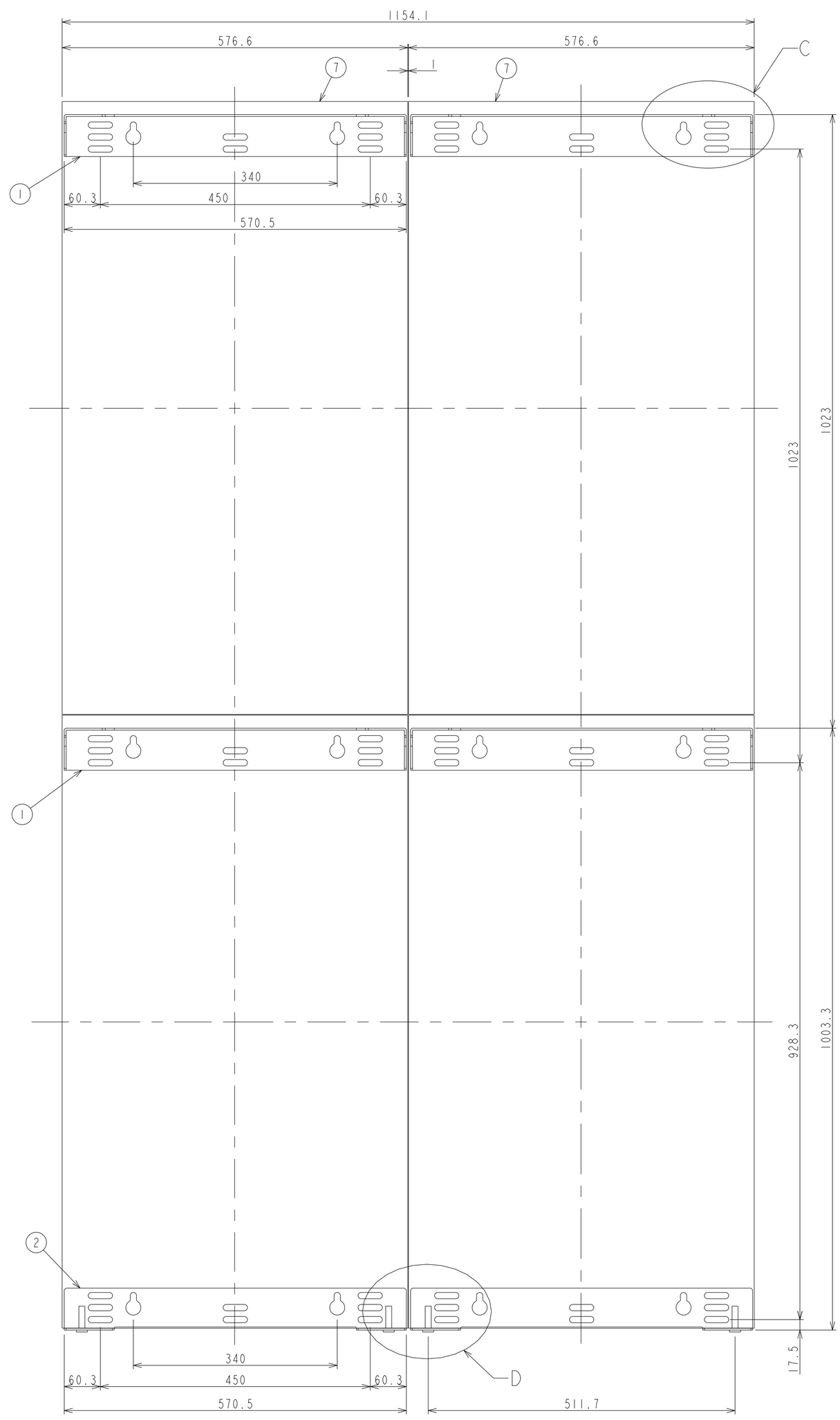

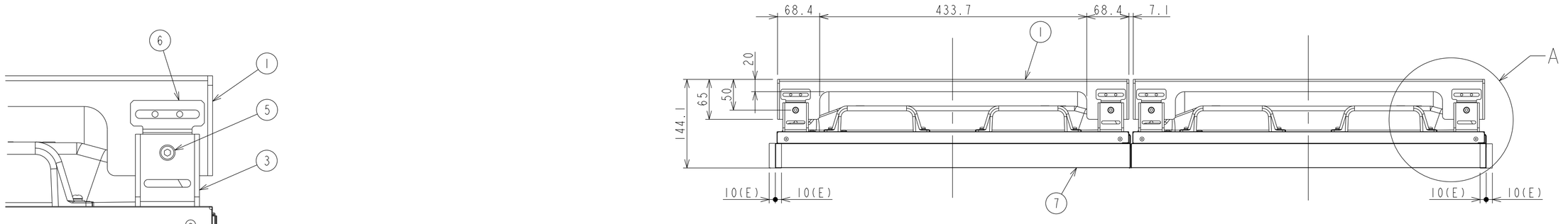

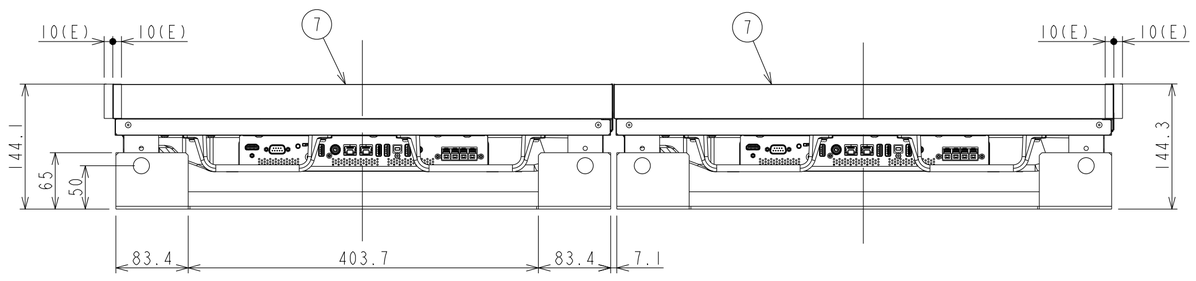

1) This monitor is not symmetrical.
   Center line shows image center.
2) Dimension (E) shows adjustable range of holizontally.
   Dimension (F) shows adjustable range of vertically.
3) Monitor position is shown bottom end in adjustable range.

Parts
① Wall bracket (top)
② Wall bracket (bottom)
③ Monitor bracket (top)
④ Monitor bracket (bottom)
⑤ Adjuster pin
⑥ Stopper
⑦ Monitor

UNIT	mm
SCALE	1/5
MODEL	UN462A with WM-46UN-P2
NEC Display Solutions 2018/12/14	