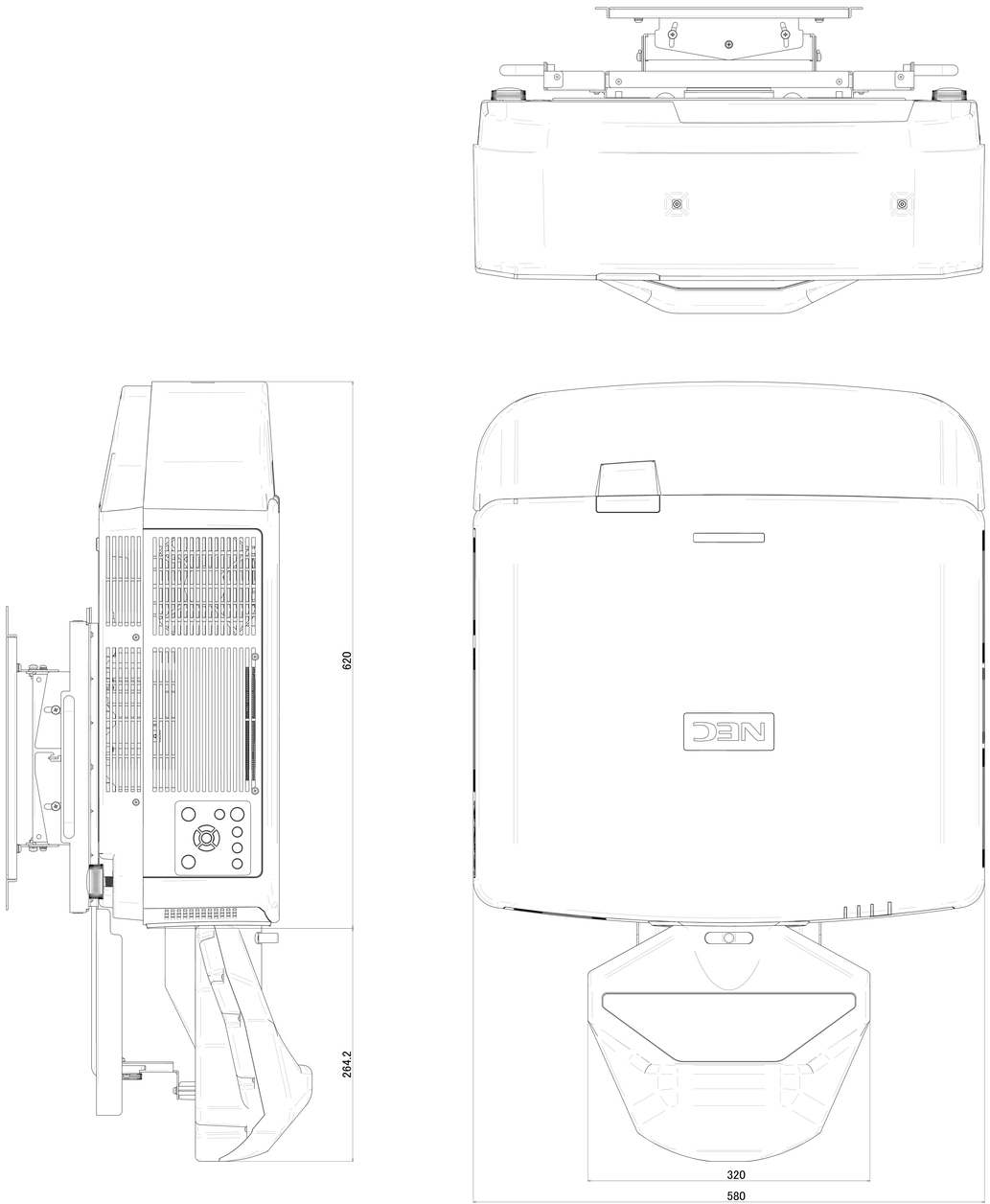

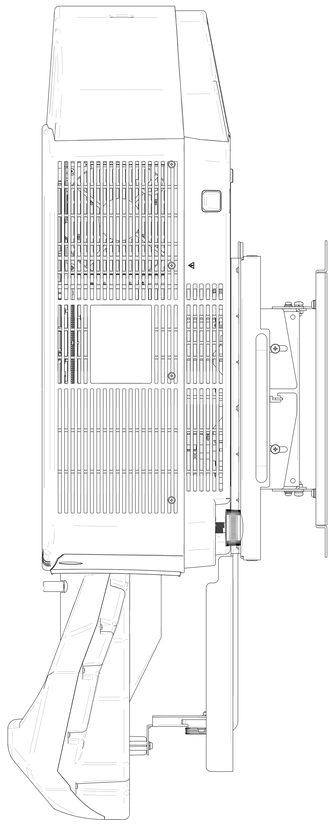

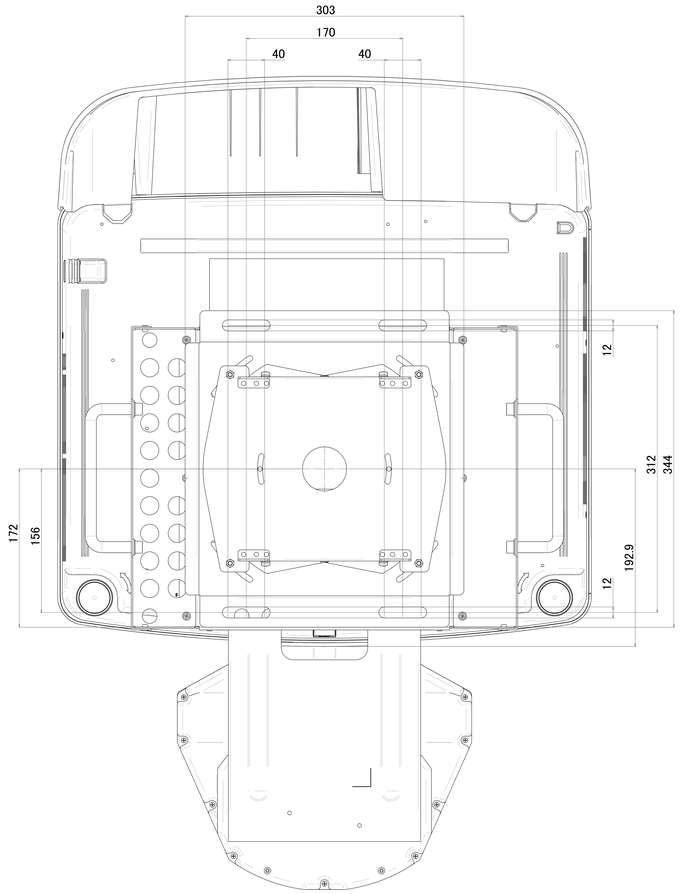

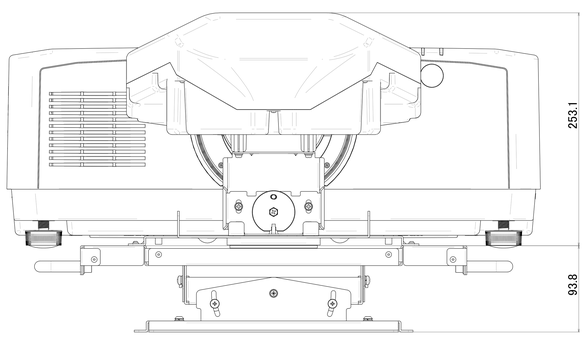

REV	DESCRIPTION
1	2018.09.20
NEC Display Solutions, Ltd.	